NeuPL: Neural Population Learning

Siqi Liu, Luke Marris, Daniel Hennes, Josh Merel, Nicolas Heess, Thore Graepel

DeepMind · UCL

Background

The policy space of *symmetric zero-sum Game-of-Skills*[1] is composed of **transitive skill dimensions** and **intransitive strategic cycles**[2].

Solving intransitive strategy games

Game-theoretic population learning algorithms (e.g. FP, PSRO[3]) offer convergence guarantees to an NE, where each policy best-responds to a mixture over predecessors:

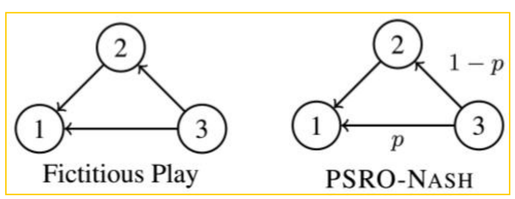

However, when combined with modern deep RL techniques[4], population learning comes at significant **costs**, for two reasons:

- Lack of positive transfer across policies;
- Suboptimal "good-"responses populating the policy population;

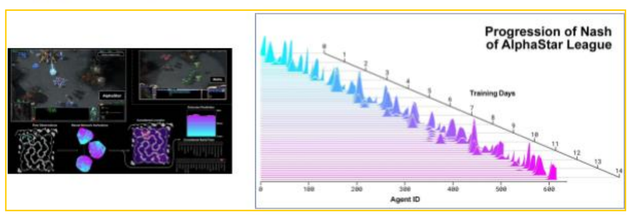

Can we leverage the expressiveness of modern deep NNs to enable a **single** model to explore, represent and reason about diverse strategies while retaining game theoretic guarantees using the same infrastructure as "self-play"?

Methods

Algorithm 1 Neural Population Learning (Ours)

$\Pi_\theta(\cdot|s,\sigma)$ ▷ Conditional neural population net.
$\Sigma := \{\sigma_i\}_{i=1}^N$ ▷ Initial interaction graph.
$\mathcal{F} : \mathbb{R}^{N\times N} \to \mathbb{R}^{N\times N}$ ▷ Meta-graph solver.
while true **do**
  $\Pi_\theta^\Sigma \leftarrow \{\Pi_\theta(\cdot|s,\sigma_i)\}_{i=1}^N$ ▷ Neural population.
  for $\sigma_i \in$ UNIQUE(Σ) **do**
    $\Pi_\theta^{\sigma_i} \leftarrow \Pi_\theta(\cdot|s,\sigma_i)$
    $\Pi_\theta^{\sigma_i} \leftarrow$ ABR$(\Pi_\theta^{\sigma_i}, \sigma_i, \Pi_\theta^\Sigma)$ ▷ Self-play.
  $\mathcal{U} \leftarrow$ EVAL(Π_θ^Σ) ▷ (Optional) if $\mathcal{F}$ adaptive.
  $\Sigma \leftarrow \mathcal{F}(\mathcal{U})$ ▷ (Optional) if $\mathcal{F}$ adaptive.
return Π_θ, Σ

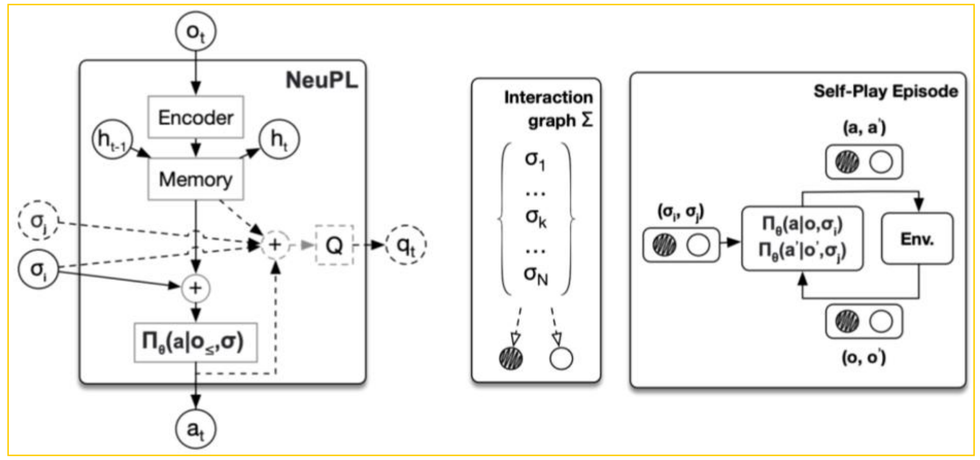

Experiments (RwS)

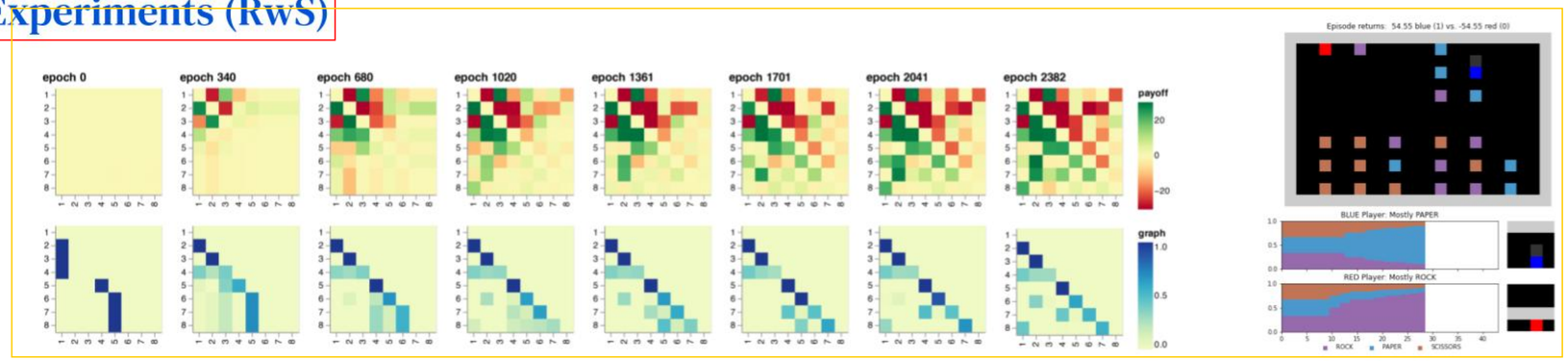

Forward Transfer

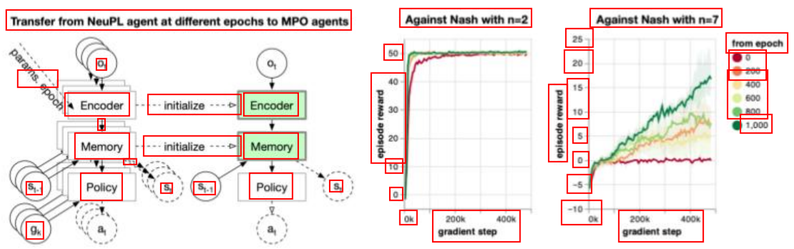

Improved Population Learning

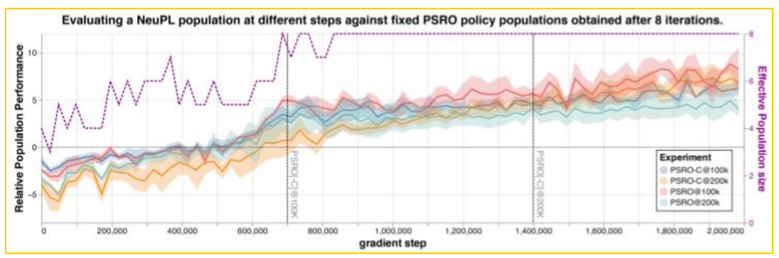

References

[1] Czarnecki, Wojciech M., et al. "Real World Games Look Like Spinning Tops." Advances in Neural Information Processing Systems 33 (2020).
[2] Balduzzi, David, et al. "Open-ended learning in symmetric zero-sum games." International Conference on Machine Learning. PMLR, 2019.
[3] Lanctot, Marc, et al. "A unified game-theoretic approach to multiagent reinforcement learning." Advances in neural information processing systems 30 (2017).
[4] Vinyals, Oriol, et al. "Grandmaster level in StarCraft II using multi-agent reinforcement learning." Nature 575.7782 (2019): 350-354.